2-Post, 11' Bike Shelter

Model: **855020**

- General Specifications -
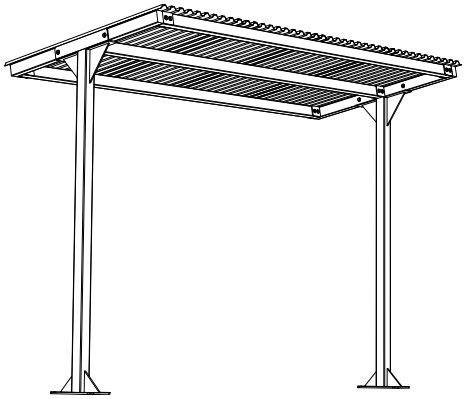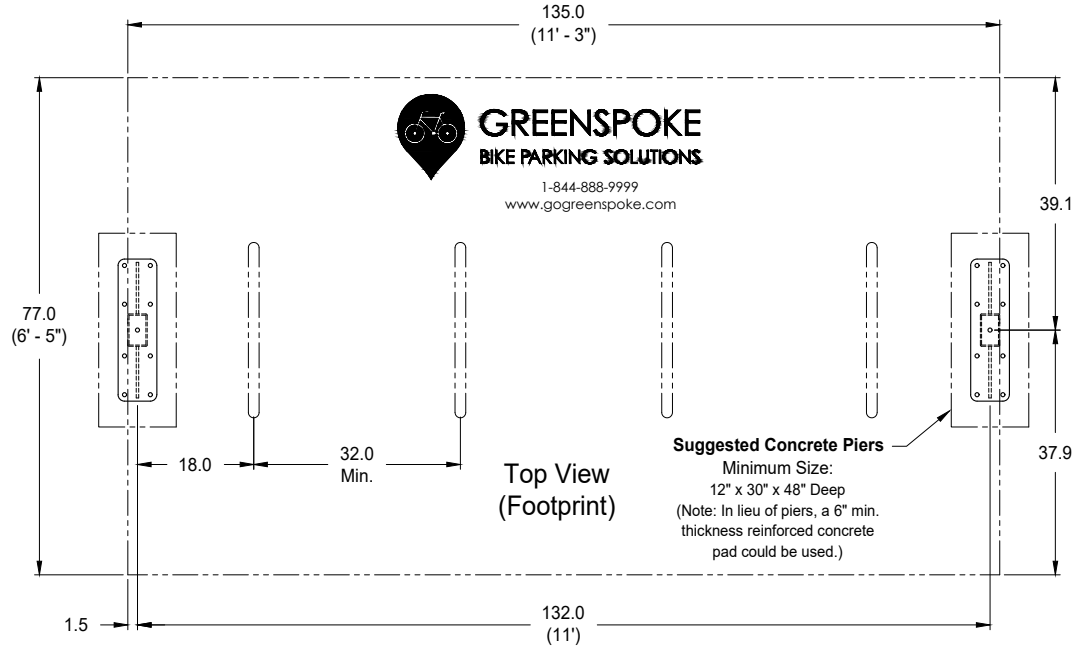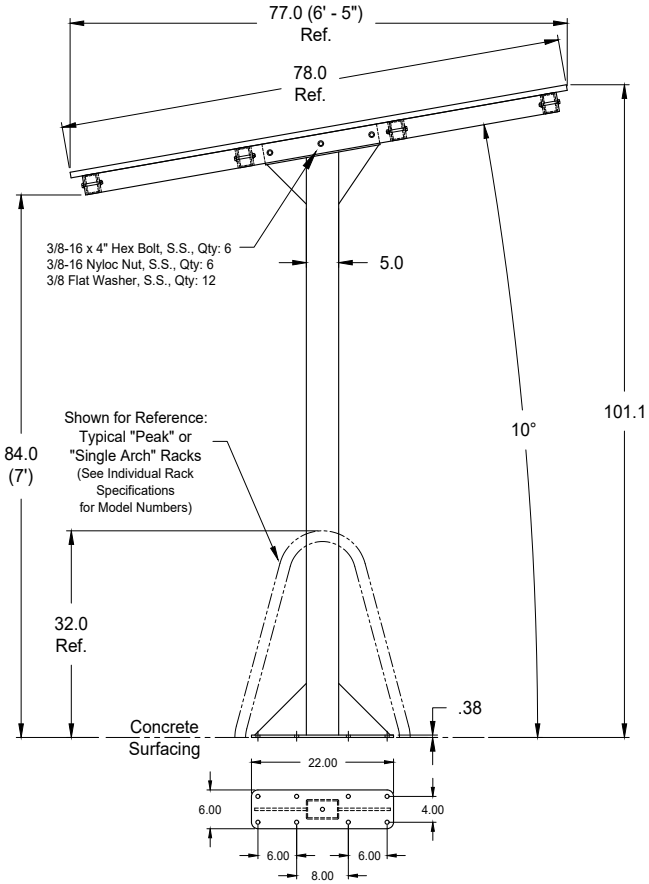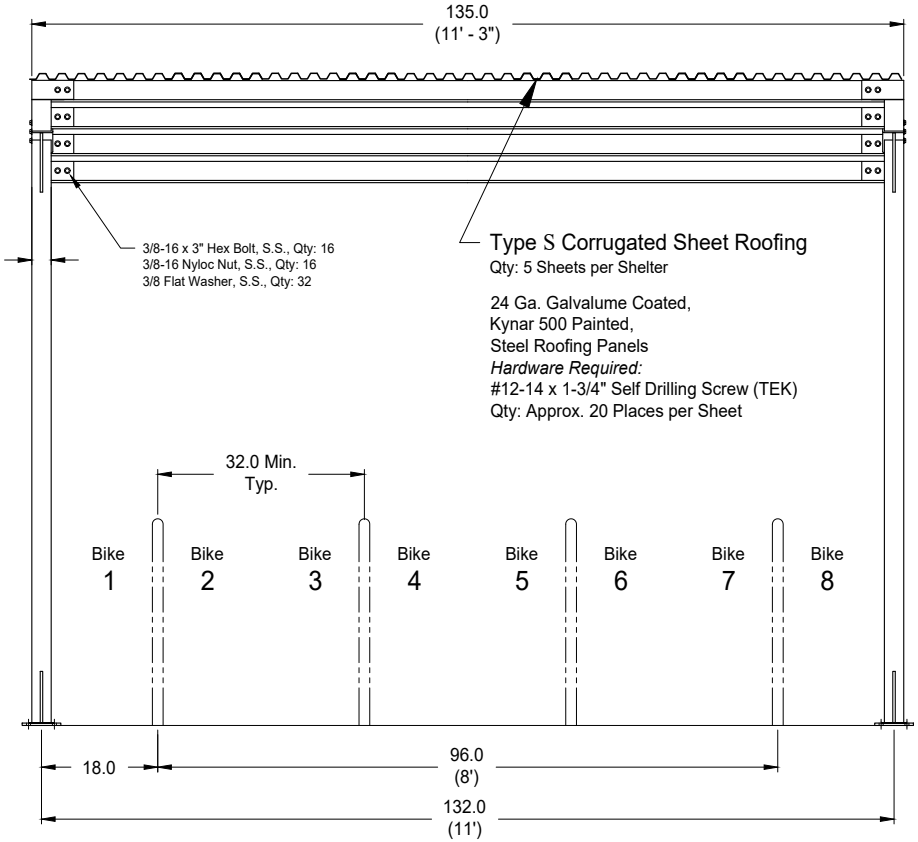
Rev.: 14Mar22