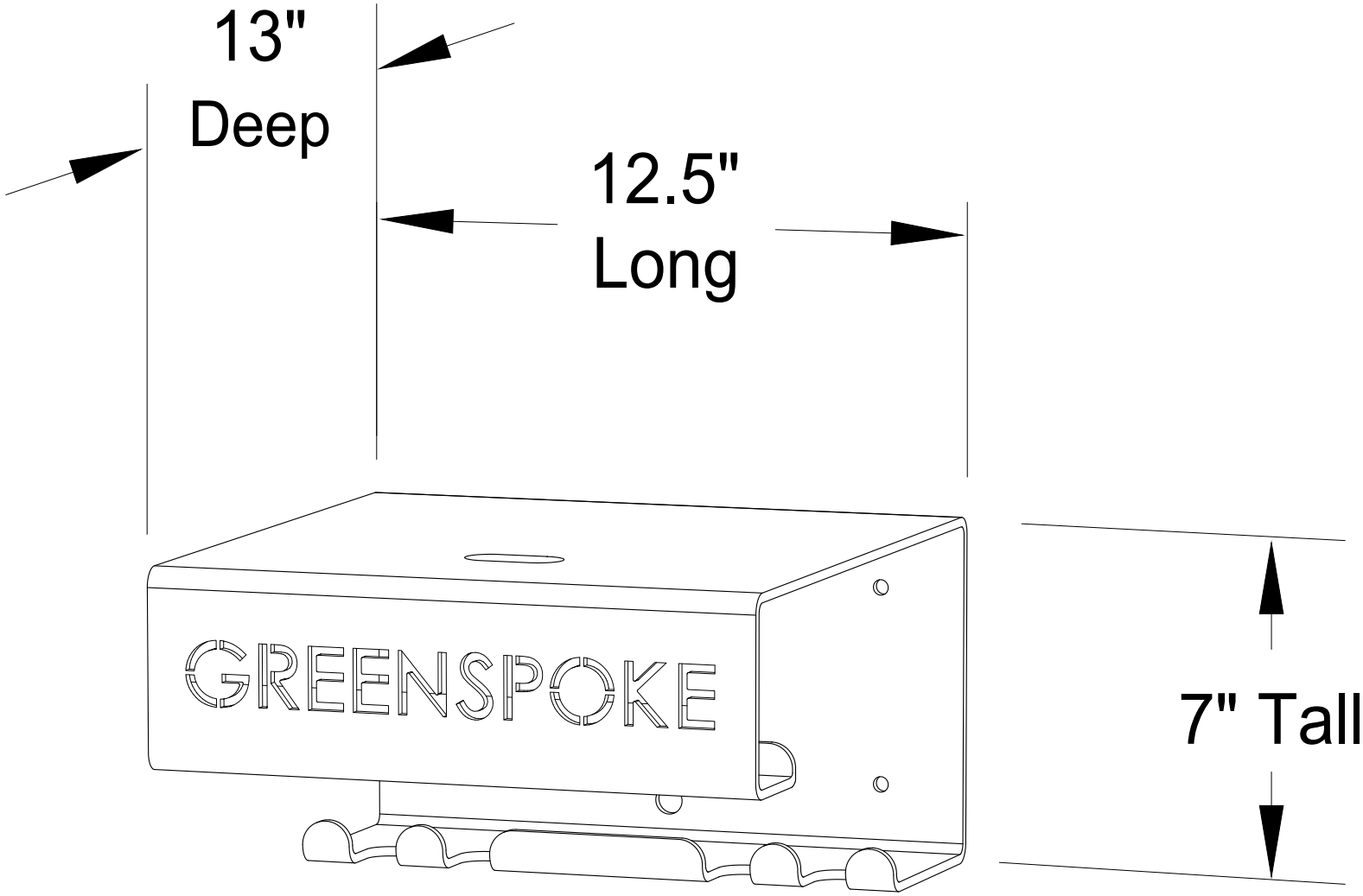
13"
Deep
12.5"
Long
GREENSPOKE
7" Tall