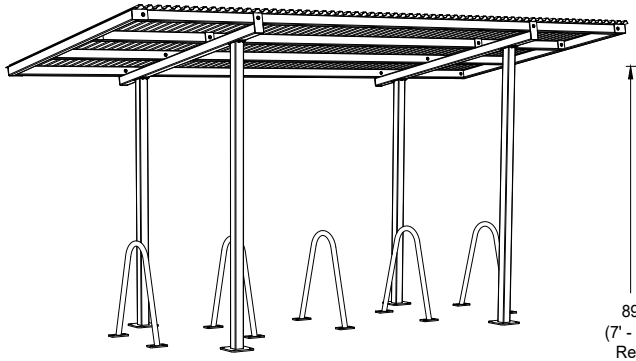

4-Post, 16' Bike Shelter
Model: **855010**
- General Specifications -
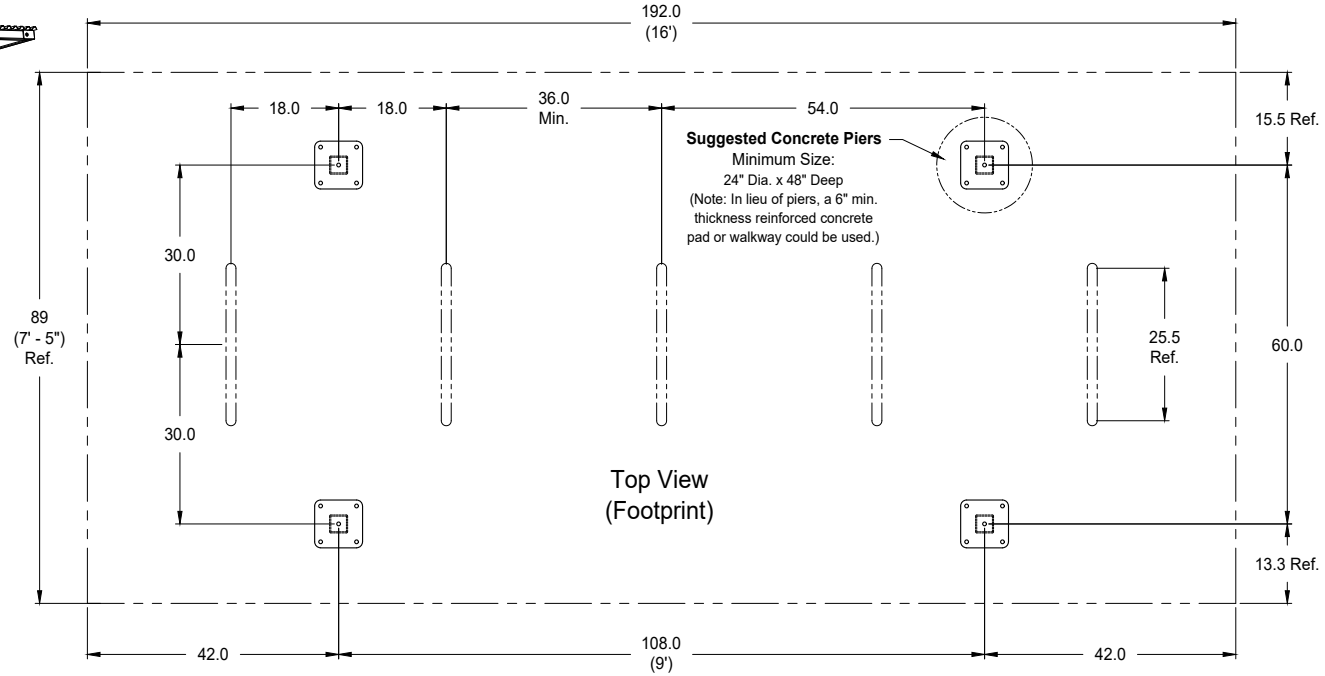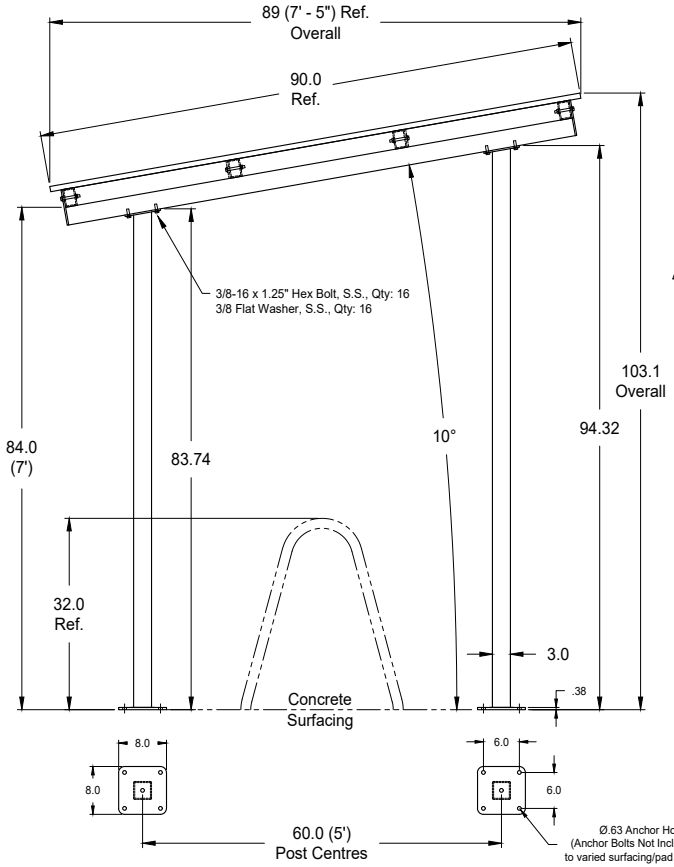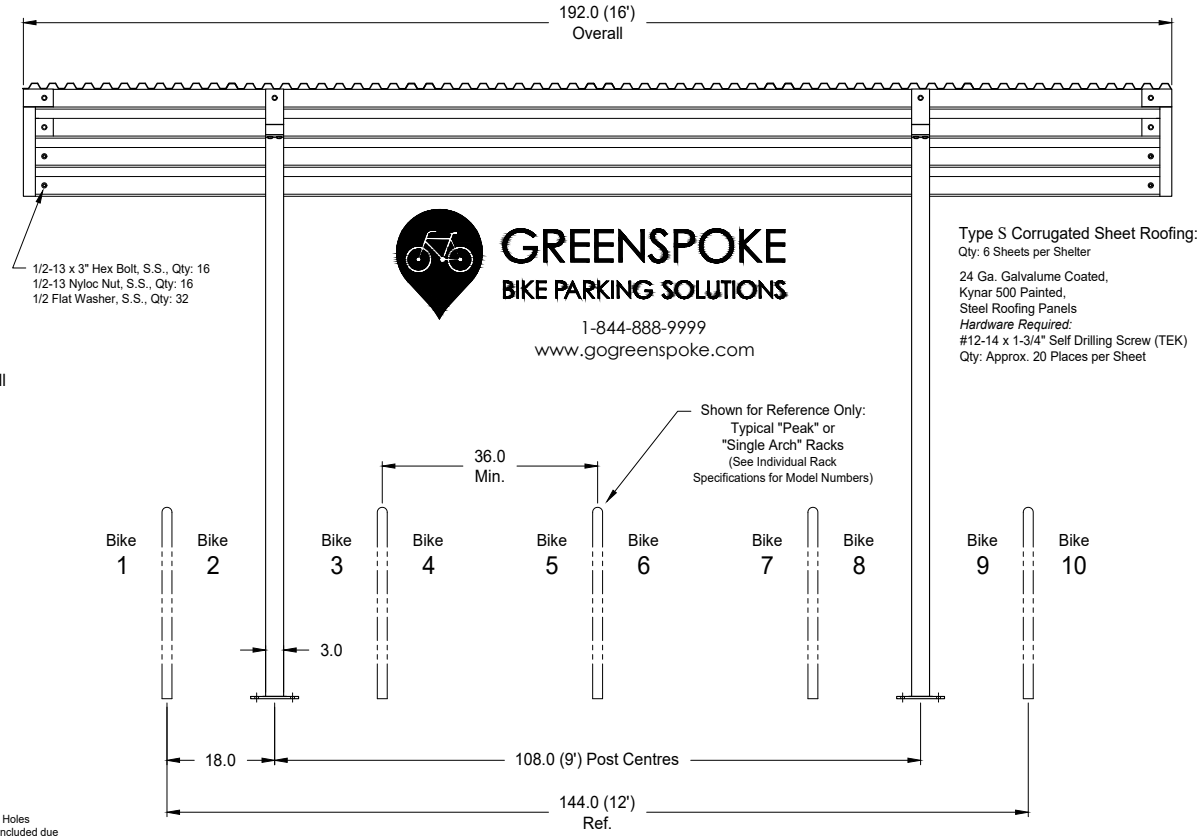
Rev.: 03May23